louis poulsen



Environmental Product Specifications

— AJ Oxford

Product description

- This table lamp emits a pleasant downward directed light, which harmoniously illuminates the surface below it through the soft transparency of the three-layered mouthblown opal glass.
- The variant without the top metal shade, the milky opal glass shade provides further glow to form an alluring halo around the fixture.





louis poulsen

Product info

Mounting

Cable type: Black textile cord 2x0.75 mm² with plug. Cable length: 2.2m. Light control: On/off switch on socket house with union nut in untreated brass.

Finish

Black wet painted stem with shade in three layered mouth-blown opal glass.

Light source

1x20w E14

Sizes and weights

Width x Height x Length (mm) | 220 x 413 x 220 Max 2,5 kg | 220 x 284 x 220 Max 2,4 kg | 220 x 410 x 220 Max 2,5 kg

Class

Ingress protection IP20. Electric shock protection II.

Product family


AJ Table


AJ Wall


AJ 50 Wall


AJ Mini Table


AJ Floor


AJ Royal

Product variants

Dimension	Colour	Mounting	Light source	Shade
280mm	Metal black/opal glass	Base	1x20W E14	OPAL GLAS
410mm	Opal	Pin ø10		W/SHADE

Material information

RoHS

This product is compliant with the requirements contained in the European Directives, RoHS Directive 2011/65 and 2015/863.

REACH candidate List

To the best of our knowledge and based on the information provided by our suppliers, the product does not contain more than 0.1 percent (in weight terms) of any deliberately added SVHCs.

Packaging

The product is packaged in a plastic bag with a cardboard. Som parts are covered with foam. The packaging material can be easily sorted and treated in waste recycling channels. The packaged product is delivered on a returnable wooden pallet.

Recycled raw material

Cardboard is made from min. 80% recycled fiber mass.

Recycling

We encourage everyone to take care of the product - even at the end of the product's lifetime. We also offer spare parts, so that we can extend the product lifetime even further.

The luminaires contain valuable materials. They therefore have to be decommissioned and dismantled for reuse of materials in other products.

This product is designed so that 100% of the product can be disassembled and reused.

Louis Poulsen is part of ELRETUR which ensures that electronic waste (WEEE) across of Europa is reused.

This product must be treated as electronic waste:



Life Cycle Screening

Background

Our carbon footprint is the total quantity of greenhouse gas (GHG) emissions associated with the full lifecycle of the product. This includes the impacts associated with raw materials and emissions from manufacturing (materials and resources), transport, in use (cleaning) impacts and impacts at end of life (reuse, recycling, incineration, landfill etc.).

Basis of calculation

This is calculated according to the EU Product Environmental Footprint and presented according to ISO 14067 (Carbon footprint of products).

EU Product Environmental Footprint (PEF)

The PEF methodology is a new standard, introduced by the European Commission.
The mission: to strengthen the (European) market for green alternatives and ensure that environmental impact is transparently assessed.

European Commission

Use stage

The product use stage is calculated for a lifetime of 15 years with 1,000 hours of use each year in Europa, as required by the reference in PEF.

The electricity is based on the European energy mix, with data from: the European Environment Agency Greenhouse gas emission intensity of electricity generation.

Transport

1.200 km national or 3.500 km for export transport is calculated for the product from factory to end customer as required by the reference in PEF.

Uncertainties associated with these calculations

Calculation of emission levels is associated with uncertainty. This means that results may vary from actual levels. By using the PEF method, uncertainties are embedded in the Life Cycle Screening result using statistical methods.

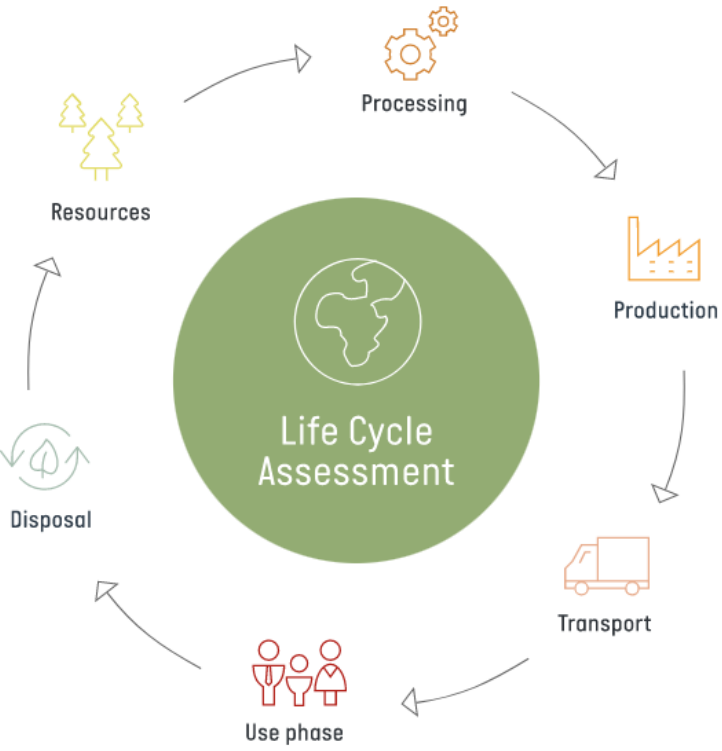

AJ Oxford 410 Opal w base

Material list

Positions number	Part description	Included substances and materials	Country of origin	Weight% (of the entire product)
A	Lamp body	Iron	CN - China	**20,8%**
A1	Painting	Powder painting	CN - China	**3,4%**
B	Lamp shade	Glass	CN - China	**37,1%**
C	Wire/plug	Electric cable (PVC)	CN - China	**5,6%**
D	Brass screws/nuts	Brass	CN - China	**0,3%**
E	Gasket washer, bushing, wire pressing plate	PC/PA66	CN - China	**0,2%**
F	Socket	Ceramic	CN - China	**2,3%**
H	Aluminium cover plate/bracket	Aluminium	CN - China	**0,7%**
I	Steel screws, bolts and nuts	Aluminium	CN - China	**0,1%**
K	Instruction and labels	Paper	CN - China	**0,9%**
L	Packaging box and inlay	Corrugated cardboard	CN - China	**27,2%**
M	Packaging foam	EPE foam	CN - China	**1,3%**
				100%

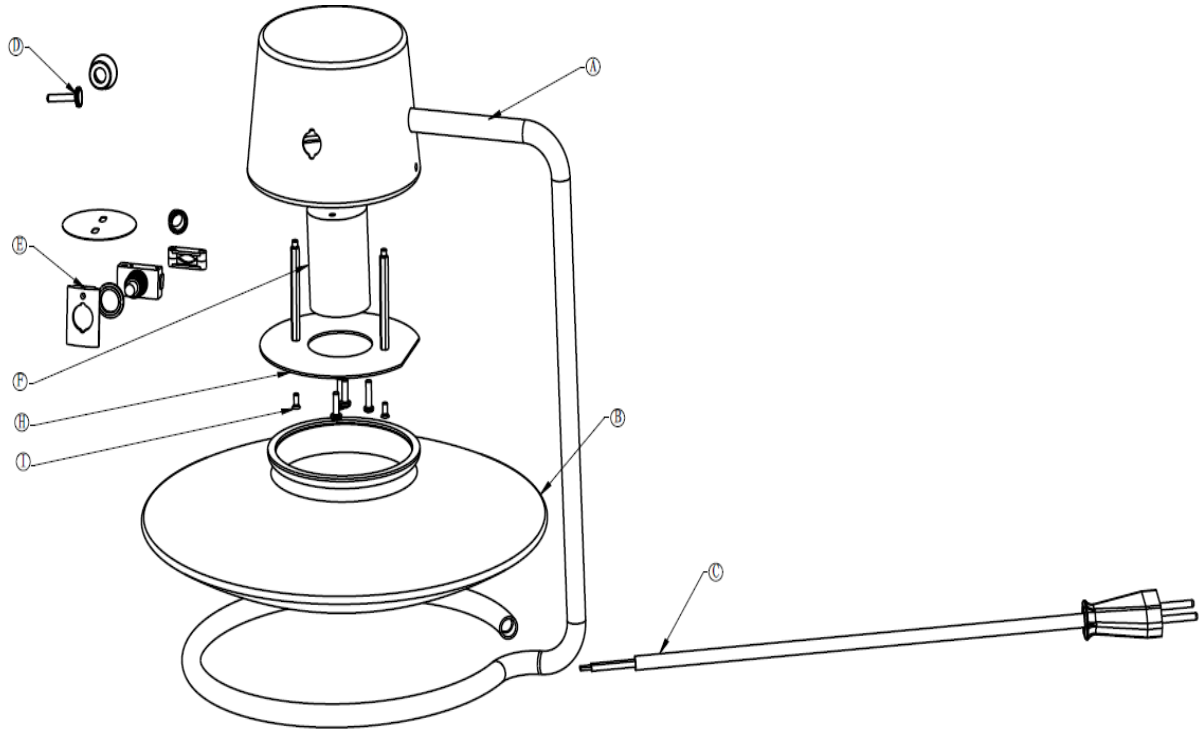

Life Cycle Screening results

Product that has been calculated as a reference for the product family:

AJ OXFORD, Ø410, OPAL, W BASE, 1x20W E14

Production of the product

Average climate emission:

23 KG CO2-e

Lower boundary: 21 CO2-e
Upper boundary: 25 CO2-e

Production of the product and use stage

Average climate emission:

65 KG CO2-e

Lower boundary: 65 CO2-e
Upper boundary: 70 CO2-e

Carbon stages

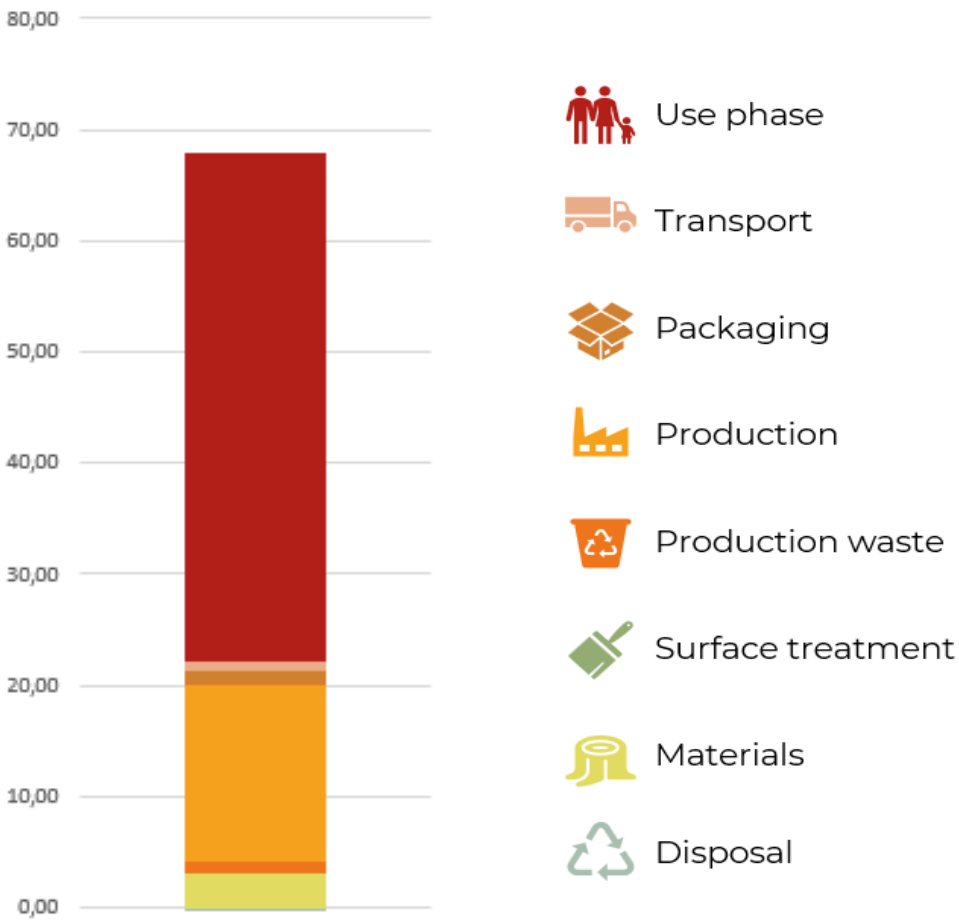

The carbon footprint has been calculated using Målbar version 2.9612; in accordance with the Product Environmental Footprint.
The carbon footprint has not been third-party verified. Only to be used for B2B, as comparing alternative results.
Comparing data across methodologies is likely to result in inaccurate representations.

Main emission sources *(pr material group)**

Group	Total impact		
Solid Wood	**0,00**	*kg CO2-e*	**0,0%**
Wood based board	**0,00**	*kg CO2-e*	**0,0%**
Metal	**0,47**	*kg CO2-e*	**2,2%**
Plastic	**0,07**	*kg CO2-e*	**0,3%**
Glass / Stone / Ceramics	**16,93**	*kg CO2-e*	**77,8%**
Surface finish & chemicals	**0,01**	*kg CO2-e*	**0,1%**
Upholstery	**0,00**	*kg CO2-e*	**0,0%**
Cover	**0,00**	*kg CO2-e*	**0,0%**
Electronic components	**1,79**	*kg CO2-e*	**8,2%**
Packaging	**1,73**	*kg CO2-e*	**7,9%**
Transport & logistics	**0,76**	*kg CO2-e*	**3,5%**

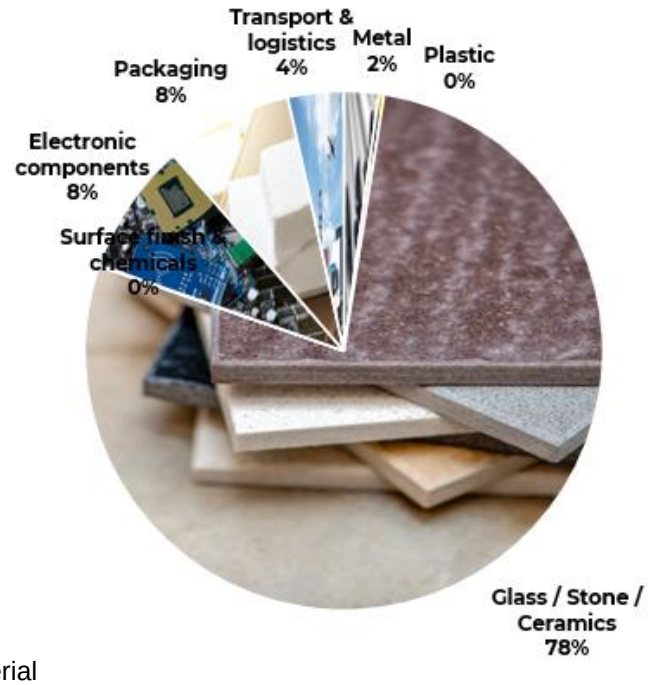

The values presented here represent total emissions per material group (incl. material, production, transport, waste, CO2e uptake)

Main emission sources *(pr element)**

Element	Material	Total impact
Shade	Virgin glass hand made	**16,93** *kg CO2-e*
Cord	Electric cable (PVC)	**1,65** *kg CO2-e*
Cardbord	Corrugated cardboard box printed not sustainable fiber	**1,31** *kg CO2-e*
Transport	Total emission from transport - all steps	**0,76** *kg CO2-e*
Foam	Foamed polyethylene (PE-LD) sheets and tubes	**0,39** *kg CO2-e*
Cover plate/bracket	Alu. cast	**0,37** *kg CO2-e*
Electronic component 2	Light bulb socket ceramic	**0,15** *kg CO2-e*
Brass screws/nuts	Brass screws	**0,11** *kg CO2-e*
Plastic part 1	Polycarbonate PC	**0,07** *kg CO2-e*
Steel screws, bolts, nuts	Steel screws/bolts	**0,03** *kg CO2-e*
Instruction and labels	Paper B&W print not sustainable	**0,03** *kg CO2-e*

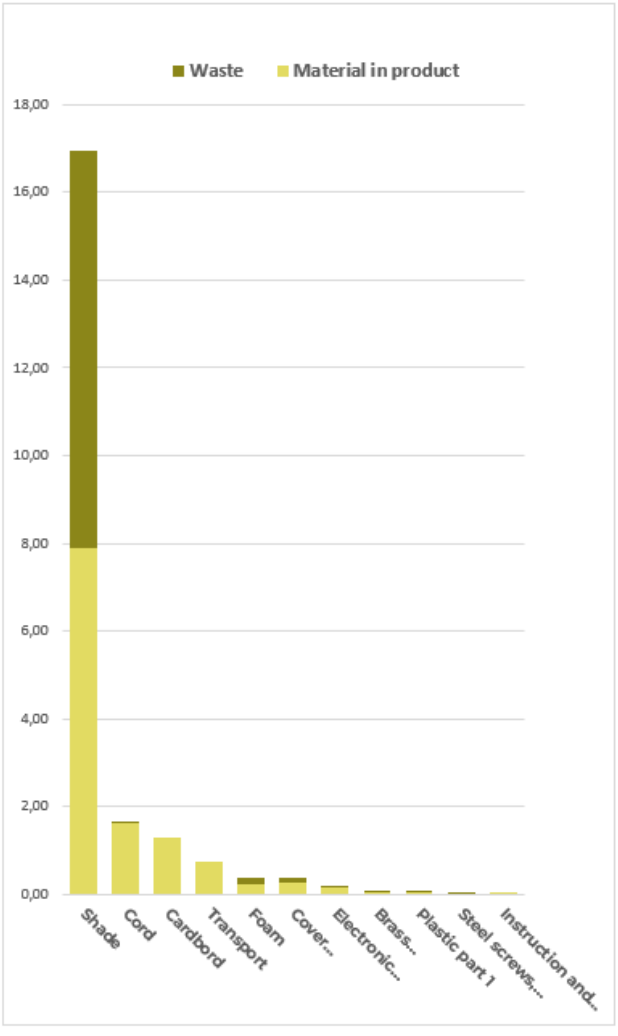

The values presented here represent total emissions per element (incl. material, production, transport, waste, CO2e uptake)